BRADFORD WHITE®

WATER HEATERS

REPLACEMENT PARTS LIST

Residential & Light Duty Commercial Gas Direct Vent Models

DEFENDER SAFETY SYSTEM®

Includes Hydrojet®
Total Performance System

Effective: April, 2015
ECO 7950

NOTE: BOTH MODEL AND SERIAL NUMBERS ARE REQUIRED FOR ORDERING REPLACEMENT PARTS

Dimensions and specifications subject to change without notice.

Parts Book # 238-51516-00A

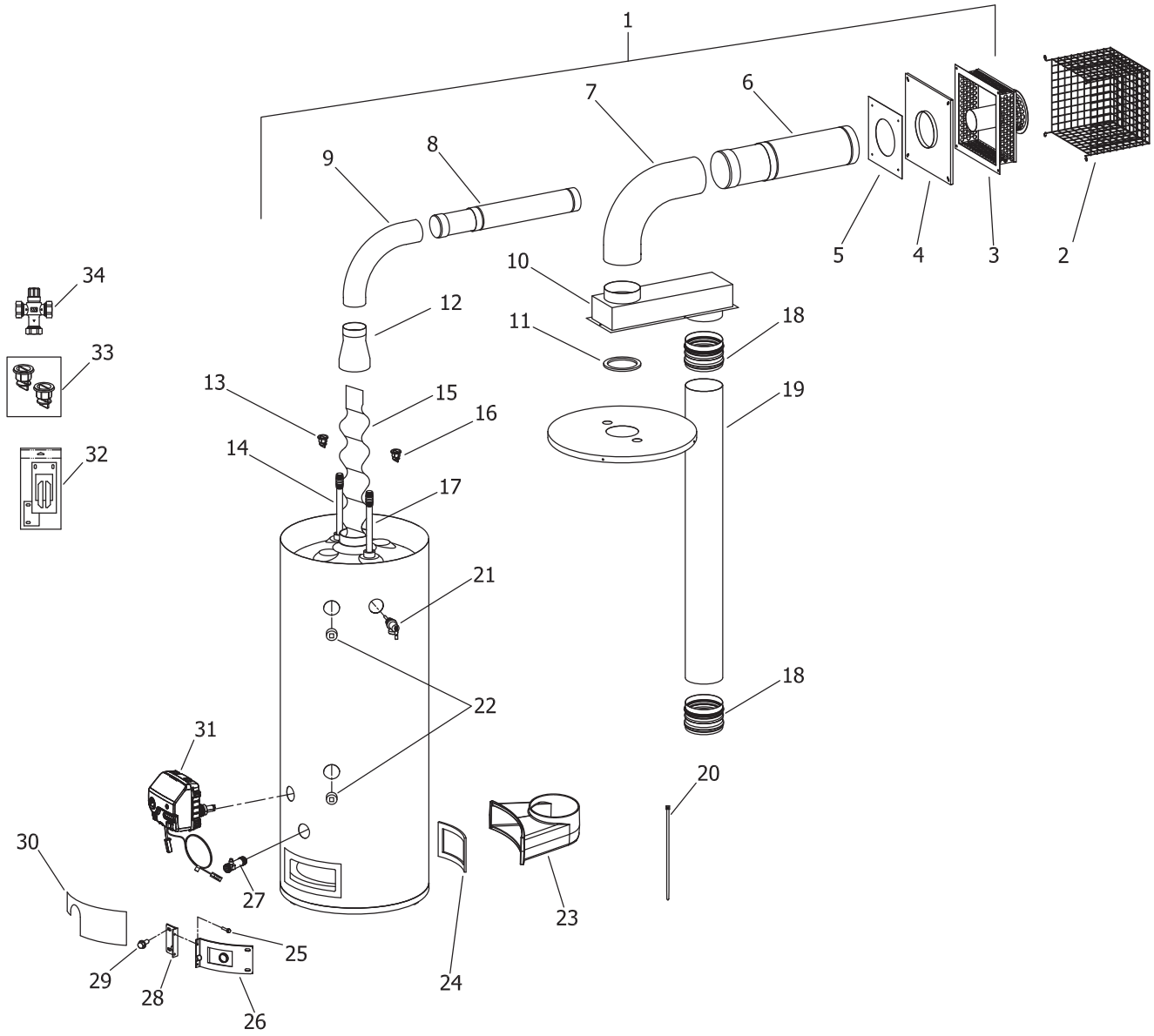

BRADFORD WHITE
WATER HEATERS

Item	Description	Model RG2DV40S*(N,X) (-OLY,-FLX,-SLD)	Model RG2DV50S*(N,X) (-OLY,-FLX,-SLD)	Model RG2DV50H*(N,X) (-OLY,-FLX,-SLD)	Model LG2DV50H50*(N,X) (-OLY,-FLX,-SLD)
1	Aluminum Venting (Solid)	239-51283-00	239-51283-00	239-51286-00	239-51286-00
	Aluminum Venting (Flexible)	239-51284-00	239-51284-00	239-51287-00	239-51287-00
2	Direct Vent-Air Intake Terminal Guard (Optional)	239-41453-00	239-41453-00	239-41453-00	239-41453-00
3	Direct Vent-Air Intake Terminal (Flexible & Solid)	239-41425-00	239-41425-00	239-42274-00	239-42274-00
4	Outer Wall Mounting Plate (Flexible & Solid)	239-41431-00	239-41431-00	239-42447-00	239-42447-00
5	Backing Plate	239-41433-00	239-41433-00	239-42449-00	239-42449-00
6	Six inch Diameter Telescopic Air Intake Tube (Solid Only)	---	---	239-42459-00	239-42459-00
	Five inch Diameter Telescopic Air Intake Tube (Solid Only)	239-41006-00	239-41006-00	---	---
7	Six inch Diameter Elbow (Solid Only)	---	---	239-42067-00	239-42067-00
	Five inch Diameter Elbow (Solid Only)	239-41007-00	239-41007-00	---	---
8	Four inch Diameter Telescopic Vent Tube (Solid Only)	---	---	239-42460-00	239-42460-00
	Three inch Diameter Telescopic Vent Tube (Solid Only)	239-41005-00	239-41005-00	---	---
9	Four inch Diameter Elbow (Solid Only)	---	---	239-42068-00	239-42068-00
	Three inch Diameter Elbow (Solid Only)	239-41008-00	239-41008-00	---	---
10	Plenum	239-47663-00	239-47663-00	239-47668-01	239-47668-01
11	Plenum Gasket	239-41070-01	239-41070-01	239-41070-02	239-41070-02
12	Flue Reducer	239-41009-00	239-41009-00	239-42066-00	239-42066-00
13	Heat Trap Insert (Outlet)	239-45167-00	239-45167-00	239-45167-00	239-45167-00
14	Hot Water Outlet Anode (Magnesium)▲ #	224-47776-19	224-47776-19	224-47776-19	224-47776-19
	Hot Water Outlet Anode (Aluminum)▲#	224-32999-42	224-32999-42	224-32999-42	224-32999-42
	Hot Water Outlet Anode (A420 Aluminum)▲#	224-49560-08	224-49560-08	224-49560-08	224-49560-08
15	Flue Baffle	243-47511-00	243-51013-00	243-50921-00	243-50921-00
16	Heat Trap Insert (Inlet)	239-51556-00	239-51556-00	239-51556-00	239-51556-00
17	Cold Water Inlet Dip Tube (PEX)▲▲	229-51230-25	229-51230-26	229-51230-20	229-51230-25
18	Coupler (2 Required) ♦	239-50102-00	239-50102-00	239-50102-00	239-50102-00
19	Air Intake Tube	239-50099-05	239-50099-06	239-50099-06	239-50099-06
20	Wire Tie	239-44328-00	239-44328-00	239-44328-00	239-44328-00
21	T&P Relief Valve	230-40594-02	230-40594-02	230-40594-02	230-40594-02
22	3/4 NPT Plug	---	---	239-11638-00	239-11638-00
23	Air Intake Boot	239-47771-18	239-47771-18	239-47771-18	239-47771-18
24	Air Intake Boot Gasket	w/ Intake Boot	w/ Intake Boot	w/ Intake Boot	w/ Intake Boot
25	Screw-#8-18 x 3/4 HWH	239-44195-00	239-44195-00	239-44195-00	239-44195-00
26	Right Side Inner Door	239-45642-18	239-45642-18	239-45642-18	239-45642-18
27	Brass Drain Valve	265-42351-02	265-42351-02	265-42351-02	265-42351-02
28	Left Side Inner Door	239-43968-18	239-43968-18	239-43968-18	239-43968-18
29	Screw-#10-12 x 3/4 HWH	239-44113-00	239-44113-00	239-44113-00	239-44113-00
30	Outer Door	243-43962-00	243-43962-00	243-43962-00	243-43962-00
31	Gas Control Direct Replacement Natural Gas	222-47463-02	222-47463-02	222-47463-02	222-47464-02
	Gas Control Direct Replacement LP Gas	222-47465-02	222-47465-02	222-47465-02	222-47466-02
32	Inner Door Gasket Kit	238-49987-00	238-49987-00	238-49987-00	238-49987-00
33	Heat Trap Insert Kit	265-51572-00	265-51572-00	265-51572-00	265-51572-00
34	ASSE Approved Mixing Valve (Optional)	239-43740-01	239-43740-01	239-43740-01	239-43740-01

*Applies to all warranties

Aluminum Anode may need to be cut to length

♦ Air intake tube (item# 19) should be purchased with coupler (item 18).

▲Order with item# 13

▲▲Order with item# 16

BRADFORD WHITE®
WATER HEATERS

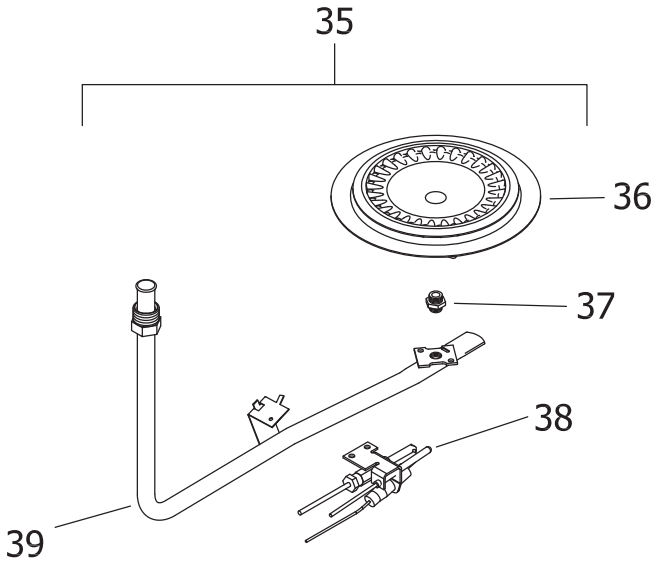

NATURAL GAS (N) BURNER ASSEMBLY

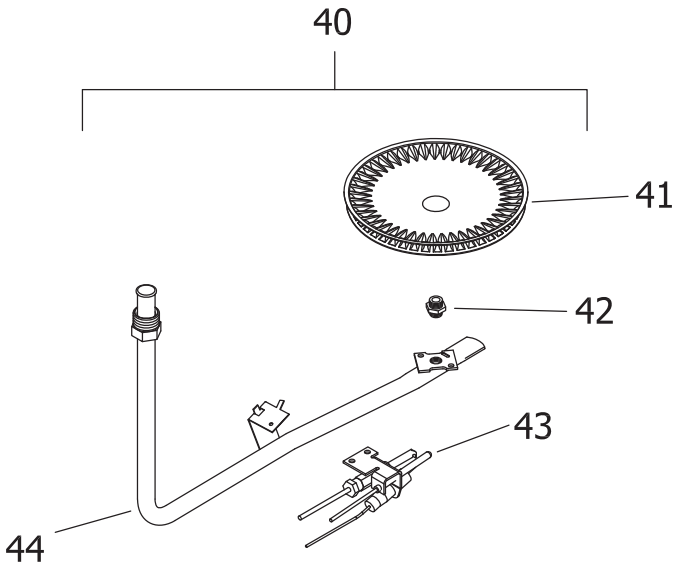

LP GAS (X) BURNER ASSEMBLY

Item	Description	Model RG2DV40S*(N,X) (-OLY,-FLX,-SLD)	Model RG2DV50S*(N,X) (-OLY,-FLX,-SLD)	Model RG2DV50H*(N,X) (-OLY,-FLX,-SLD)	Model LG2DV50H50*(N,X) (-OLY,-FLX,-SLD)
	Natural Gas (N) Burner Assembly				
35	Nat. Gas Burner Assembly Complete***	243-48110-06-33	243-48110-06-32	243-48110-06-31	243-48110-06-31
36	Nat. Gas BN Burner**	228-42506-00	228-42506-00	228-42506-00	228-42506-00
37	Nat. Gas (N) Main Burner Orifice 0 Ft. to 2,000 Ft. **	234-41034-33	234-41034-32	234-41034-31	234-41034-31
	Nat. Gas (N) High Altitude Orifice 0 Ft. to 7,000 Ft. (-475 model suffixes) **	234-41034-38	234-41034-36	234-41034-35	234-41034-35
	Nat. Gas (N) High Altitude Orifice Kit 7,001 Ft. to 10,000 Ft.	265-51311-02-41	265-51311-02-40	265-51311-02-38	265-51311-02-38
38	Nat. Gas Pilot Assembly	233-48077-03	233-48077-03	233-48077-03	233-48077-03
39	Nat. Gas Feedline	233-48095-05	233-48095-05	233-48095-05	233-48095-05
	LP Gas (X) Burner Assembly				
40	LP Gas Burner Assembly Complete***	243-48111-02-50	243-48111-02-49	243-48303-04-47	243-48303-04-47
41	LP Gas (X) Burner**	228-46964-00	228-46964-00	228-47000-00	228-47000-00
42	LP Gas (X) Main Burner Orifice 0 Ft. to 2,000 Ft. **	234-47064-50	234-47064-49	234-47064-47	234-47064-47
	LP Gas (X) High Altitude Orifice 0 Ft. to 7,000 ft. (-475 model suffixes) **	234-47064-52	234-47064-51	234-47064-50	234-47064-50
	LP Gas (X) High Altitude Orifice Kit 7,001 Ft. to 10,000 Ft. **	265-51367-02-53	265-51367-02-53	265-51367-02-51	265-51367-02-51
43	LP Gas Pilot Assembly**	233-48078-03	233-48078-03	233-48078-03	233-48078-03
44	LP Gas Feedline	233-47677-05	233-47677-05	233-47677-05	233-47677-05
	LP Gas (X) to Nat. Gas (N) Conversion kit	265-47452-31	265-47452-33	265-47452-35	265-47452-37
	LP Gas (X) to Nat. Gas (N) Conversion kit (hi alt. -475 model suffixes)	265-47452-32	265-47452-34	265-47452-36	265-47452-38

*Applies to all warranties
**Inner door gasket kit recommended
***Ordering a complete burner assembly may increase delivery time. Please order the specific component required for the quickest delivery.

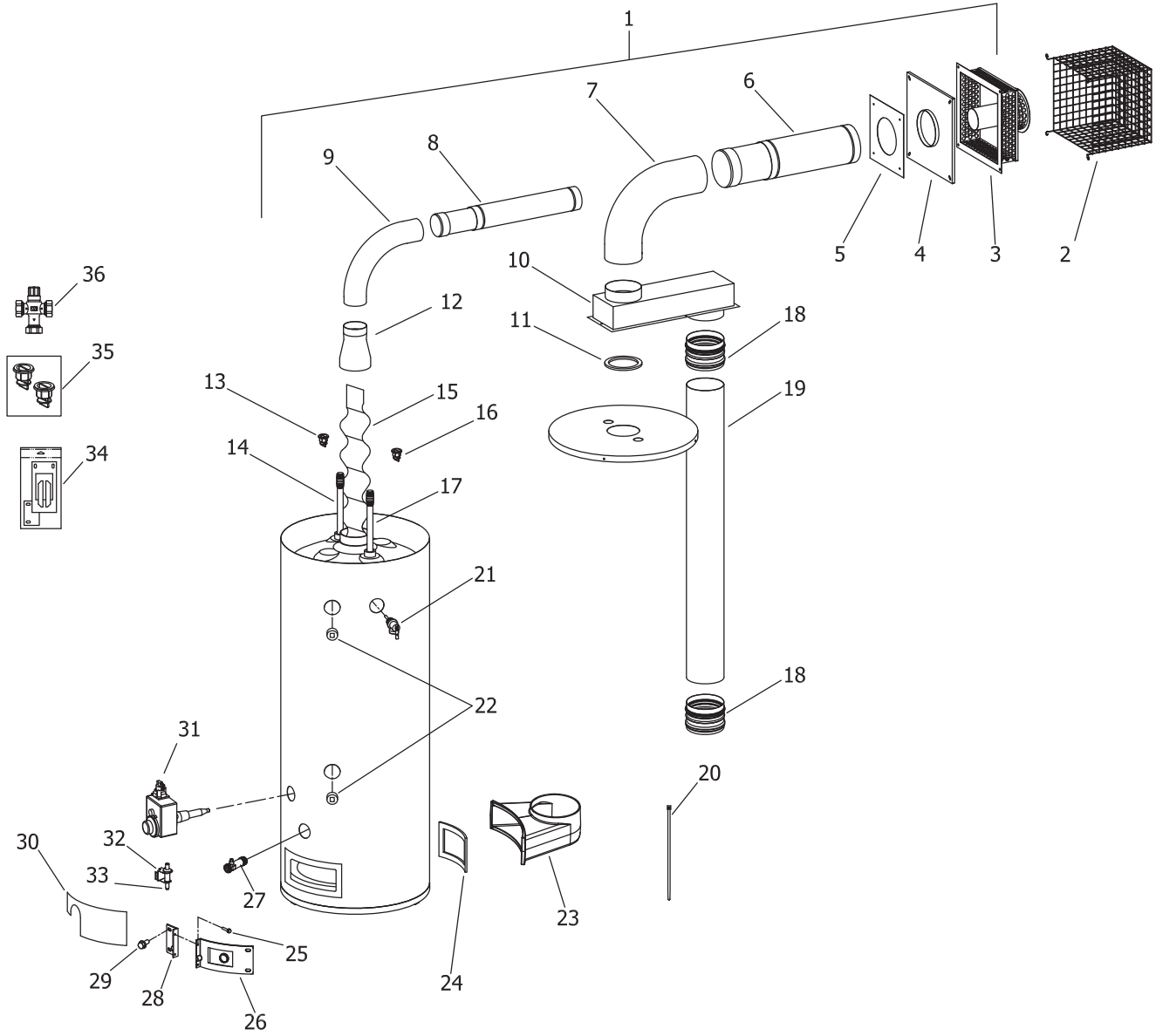

BRADFORD WHITE®
WATER HEATERS

Item	Description	Model RG2DV40S*(N,X) (-OLY,-FLX,-SLD) -500	Model RG2DV50S*(N,X) (-OLY,-FLX,-SLD) -500	Model RG2DV50H*(N,X) (-OLY,-FLX,-SLD) -500	Model LG2DV50H50*(N,X) (-OLY,-FLX,-SLD) -500
1	Aluminum Venting (Solid)	239-51283-00	239-51283-00	239-51286-00	239-51286-00
	Aluminum Venting (Flexible)	239-51284-00	239-51284-00	239-51287-00	239-51287-00
2	Direct Vent-Air Intake Terminal Guard (Optional)	239-41453-00	239-41453-00	239-41453-00	239-41453-00
3	Direct Vent-Air Intake Terminal (Flexible & Solid)	239-41425-00	239-41425-00	239-42274-00	239-42274-00
4	Outer Wall Mounting Plate (Flexible & Solid)	239-41431-00	239-41431-00	239-42447-00	239-42447-00
5	Backing Plate	239-41433-00	239-41433-00	239-42449-00	239-42449-00
6	Six inch Diameter Telescopic Air Intake Tube (Solid Only)	---	---	239-42459-00	239-42459-00
	Five inch Diameter Telescopic Air Intake Tube (Solid Only)	239-41006-00	239-41006-00	---	---
7	Six inch Diameter Elbow (Solid Only)	---	---	239-42067-00	239-42067-00
	Five inch Diameter Elbow (Solid Only)	239-41007-00	239-41007-00	---	---
8	Four inch Diameter Telescopic Vent Tube (Solid Only)	---	---	239-42460-00	239-42460-00
	Three inch Diameter Telescopic Vent Tube (Solid Only)	239-41005-00	239-41005-00	---	---
9	Four inch Diameter Elbow (Solid Only)	---	---	239-42068-00	239-42068-00
	Three inch Diameter Elbow (Solid Only)	239-41008-00	239-41008-00	---	---
10	Plenum	239-47663-00	239-47663-00	239-47668-01	239-47668-01
11	Plenum Gasket	239-41070-01	239-41070-01	239-41070-02	239-41070-02
12	Flue Reducer	239-41009-00	239-41009-00	239-42066-00	239-42066-00
13	Heat Trap Insert (Outlet)	239-45167-00	239-45167-00	239-45167-00	239-45167-00
14	Hot Water Outlet Anode (Magnesium)▲ #	224-47776-19	224-47776-19	224-47776-19	224-47776-19
	Hot Water Outlet Anode (Aluminum)▲#	224-32999-42	224-32999-42	224-32999-42	224-32999-42
	Hot Water Outlet Anode (A420 Aluminum)▲#	224-49560-08	224-49560-08	224-49560-08	224-49560-08
15	Flue Baffle	243-47511-00	243-51013-00	243-50921-00	243-50921-00
16	Heat Trap Insert (Inlet)	239-51556-00	239-51556-00	239-51556-00	239-51556-00
17	Cold Water Inlet Dip Tube (PEX)▲▲	229-51230-25	229-51230-26	229-51230-20	229-51230-25
18	Coupler (2 Required) ♦	239-50102-00	239-50102-00	239-50102-00	239-50102-00
19	Air Intake Tube	239-50099-05	239-50099-06	239-50099-06	239-50099-06
20	Wire Tie	239-44328-00	239-44328-00	239-44328-00	239-44328-00
21	T&P Relief Valve	230-40594-02	230-40594-02	230-40594-02	230-40594-02
22	3/4 NPT Plug	---	---	239-11638-00	239-11638-00
23	Air Intake Boot	239-47771-18	239-47771-18	239-47771-18	239-47771-18
24	Air Intake Boot Gasket	w/ Intake Boot	w/ Intake Boot	w/ Intake Boot	w/ Intake Boot
25	Screw-#8-18 x 3/4 HWH	239-44195-00	239-44195-00	239-44195-00	239-44195-00
26	Right Side Inner Door	239-45642-18	239-45642-18	239-45642-18	239-45642-18
27	Brass Drain Valve	265-42351-02	265-42351-02	265-42351-02	265-42351-02
28	Left Side Inner Door	239-43968-18	239-43968-18	239-43968-18	239-43968-18
29	Screw-#10-12 x 3/4 HWH	239-44113-00	239-44113-00	239-44113-00	239-44113-00
30	Outer Door	243-43962-00	243-43962-00	243-43962-00	243-43962-00
31	Gas Control Natural Gas (White Rodgers)	239-40251-03	239-40251-03	239-40251-03	239-40251-03
	Gas Control LP Gas (White Rodgers)	239-40258-01	239-40258-01	239-40258-01	239-40258-01
32	Piezo Igniter	239-43448-00	239-43448-00	239-43448-00	239-43448-00
33	Piezo Igniter Mounting Bracket	239-46157-02	239-46157-02	239-46157-02	239-46157-02
34	Inner Door Gasket Kit	238-49987-00	238-49987-00	238-49987-00	238-49987-00
35	Heat Trap Insert Kit	265-51572-00	265-51572-00	265-51572-00	265-51572-00
36	ASSE Approved Mixing Valve (Optional)	239-43740-01	239-43740-01	239-43740-01	239-43740-01

*Applies to all warranties
**Inner door gasket kit recommended
Anode may need to be cut to length
♦ Air intake tube (item# 19) should be purchased with coupler (item# 18).

▲Order with item# 13
▲▲Order with item# 16

BRADFORD WHITE®
WATER HEATERS

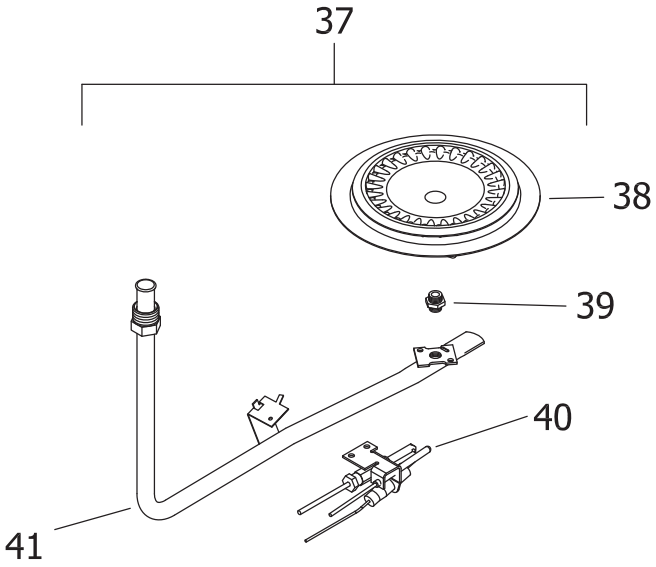

NATURAL GAS (N) BURNER ASSEMBLY

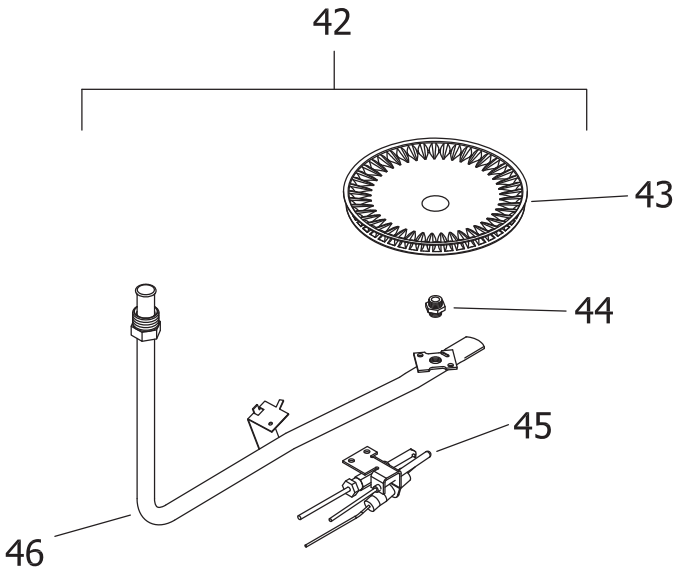

LP GAS (X) BURNER ASSEMBLY

Item	Description	Model RG2DV40S*(N,X) (-OLY,-FLX,-SLD) -500	Model RG2DV50S*(N,X) (-OLY,-FLX,-SLD) -500	Model RG2DV50H*(N,X) (-OLY,-FLX,-SLD) -500	Model LG2DV50H50*(N,X) (-OLY,-FLX,-SLD) -500
	Natural Gas (N) Burner Assembly				
37	Nat. Gas (N) Burner Assembly Complete***	265-47970-02-33	265-47970-02-32	265-47970-04-31	265-47970-04-31
38	Nat. Gas (N) Burner**	228-42506-00	228-42506-00	228-42506-00	228-42506-00
39	Nat. Gas (N) Main Burner Orifice 0 Ft. to 2,000 Ft.**	234-41034-33	234-41034-32	234-41034-31	234-41034-31
40	Nat. Gas (N) Pilot Assembly**	233-46277-04	233-46277-04	233-46277-04	233-46277-04
	LP Gas (X) Burner Assembly				
41	LP Gas (X) Burner Assembly Complete***	265-47971-02-50	265-47971-02-50	265-47972-04-47	265-47972-04-47
42	LP Gas (X) Burner**	228-46964-00	228-46964-00	228-47000-00	228-47000-00
43	LP Gas (X) Main Burner Orifice 0 Ft. to 2,000 Ft.**	234-47064-50	234-47064-50	234-47064-47	234-47064-47
44	LP Gas (X) Pilot Assembly**	233-46278-04	233-46278-04	233-46278-04	233-46278-04

*Applies to all warranties
**Inner door gasket kit recommended
***Ordering a complete burner assembly may increase delivery time. Please order the specific component required for the quickest delivery.

SOLID VENT KITS

Horizontal "X"

Vertical "Y"	16 1/4 17 3/16	18 20 11/16	25 1/4 35 3/16	37 3/4 57 7/8	61 5/16 107 5/16
11 9/16	order kit F 239-42516-00	order kit G 239-42517-00	**no add'l kit req'd**	order kit H 239-42514-00	order kit I 239-42512-00
16 5/16 17 1/4	order kit F *(2) 239-42516-00	order kit F & G 239-42516-00 239-42517-00	order kit F 239-42516-00	order kit F & H 239-42516-00 239-42514-00	order kit F & I 239-42516-00 239-42512-00
18 1/16 20 3/4	order kit F & G 239-42516-00 239-42517-00	order kit G *(2) 239-42517-00	order kit G 239-42517-00	order kit G & H 239-42517-00 239-42514-00	order kit G & I 239-42517-00 239-42512-00
25 5/16 35 1/4	order kit F 239-42516-00	order kit G 239-42517-00	order kit H 239-42514-00	order kit H *(2) 239-42514-00	order kit I 239-42512-00
38 1/16 57 15/16	order kit F & H 239-42516-00 239-42514-00	order kit G & H 239-42517-00 239-42514-00	order kit H *(2) 239-42514-00	order kit H *(3) 239-42514-00	order kit H & I 239-42514-00 239-42512-00
61 3/8 107 3/8	order kit F & I 239-42516-00 239-42512-00	order kit G & I 239-42517-00 239-42512-00	order kit I 239-42512-00	order kit H & I 239-42514-00 239-42512-00	order kit I *(2) 239-42512-00

*(2) = Order two kits
*(3) = Order three kits

FLEXIBLE VENT KITS

Vertical Vent Height + Horzontal Vent Length	Kit Part Number
Less than 100 inches	239-48915-00
More than 100 inches	N/A*

*Do not attempt to use flexible vent hose at a distance greater than 100 inches.

BRADFORD WHITE®
WATER HEATERS

SOLID VENT KITS

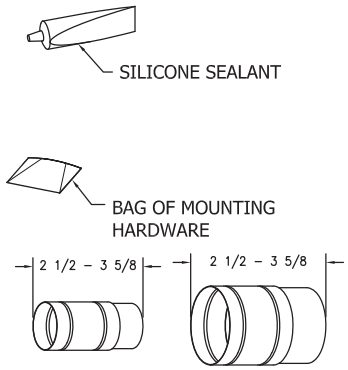

DIRECT VENT-AIR INTAKE KIT F
PART NO. 239-42516-00 (OPTIONAL)

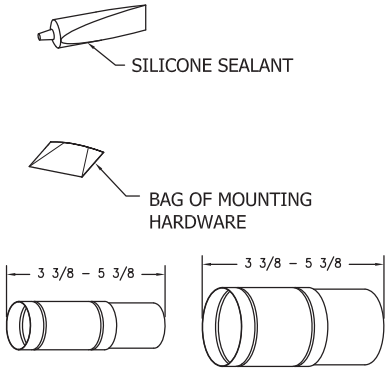

DIRECT VENT-AIR INTAKE KIT G
PART NO. 239-42517-00 (OPTIONAL)

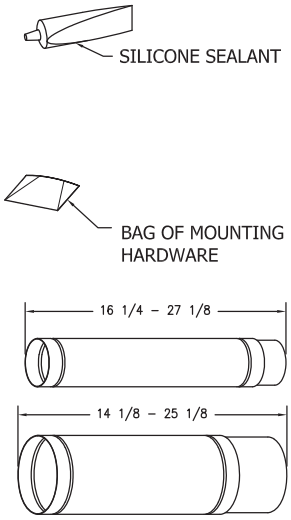

DIRECT VENT-AIR INTAKE KIT H
PART NO. 239-42514-00 (OPTIONAL)
ABOVE TUBE LENGTHS SUPPLIED WITH HEATER

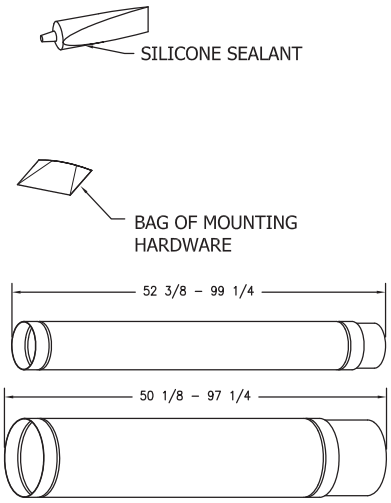

DIRECT VENT-AIR INTAKE KIT I
PART NO. 239-42512-00 (OPTIONAL)

BRADFORD WHITE®
WATER HEATERS

BRADFORD WHITE®
WATER HEATERS
Ambler, PA

For U.S. and Canada field service,
contact your professional installer or
local Bradford White sales representative.

Sales/**800-523-2931**
*Fax/**215-641-1670***
*Parts Fax/**215-641-2180***

Technical Support/**800-334-3393**
*Fax/**269-795-1089***

Warranty/**800-531-2111**
*Fax/**269-795-1089***

International:
Telephone/**215-641-9400**
*Telefax/**215-641-9750***

BRADFORD WHITE-CANADA® INC.
Mississauga, ON

Sales/**866-690-0961**
905-238-0100

*Fax/**905-238-0105***

Technical Support/**800-334-3393**

Email
parts@bradfordwhite.com
techserv@bradfordwhite.com

www.bradfordwhite.com